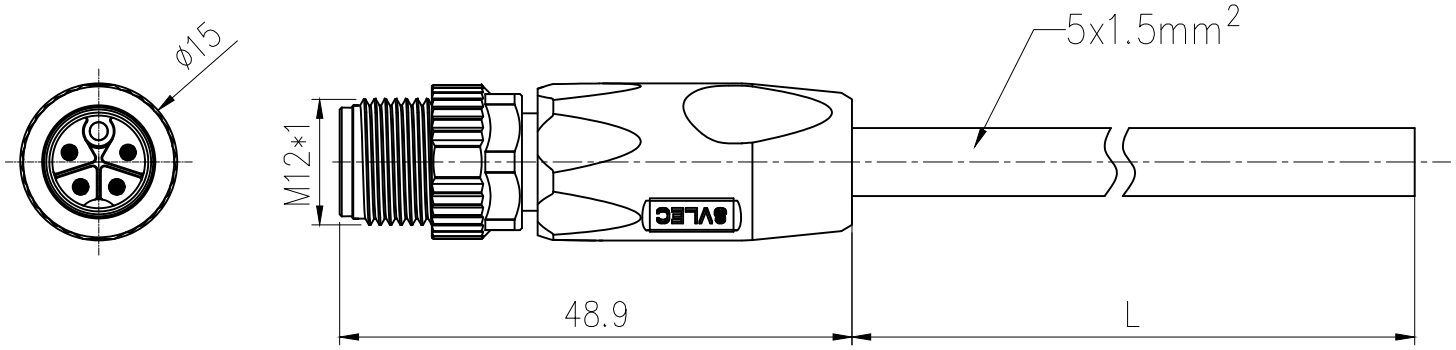

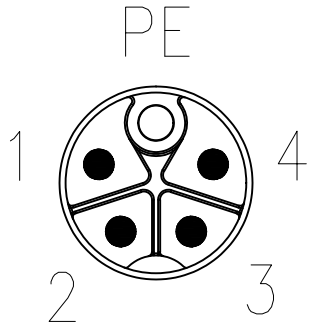

K扣插针图

K Coded Male

接线图:

Circuit Diagram:

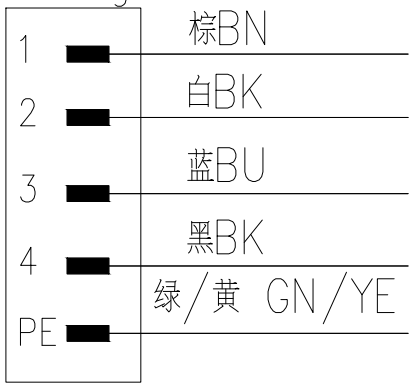

材料和技术参数(Material&Technical data):

金属件(Metallic parts): 锌合金(Zinc alloy)

接触件(Contact): 铜镀金(Copper plated)

插芯材质(Core insert material): PA

包胶体(Encapsulated colloid): TPU Black

电缆护套(Cable jacket): PVC/PUR

电缆号(Cable number): 961/962

额定电压(Rated voltage): 630V AC/DC

额定脉冲电压(Rated pulse voltage): 6KV

额定电流(Rated current)(40° C): max.12A

温度范围(Temperature range): -25...+80° C

防护等级(Protection): IP67(插孔插针配合拧紧)(EN 60529)

When plugged and screwed down

执行标准(Executive standard): IEC 61076-2-111

导体横截面(CSA): 5x1.5mm²

绝缘电阻(Insulation resistance): ≥100MΩ

接触电阻(Touch resistance): ≤5mΩ

可插拔次数(Number of pluggable times): ≥ 100

SIGN	REVISION	NAME	DATE

DIMENSION CLASSIFICATION

MATERIAL : SEE TABLE	
FINISH : SEE TABLE	
DRAWN BY: WYL	CHK'D BY:
APP'D BY :	SCALE : 1 : 1
SHEET 1 OF 1	UNIT : mm
DATE :	DAN :

兴威联电气

SVLEC

TITLE: M12-K扣5芯预铸直型公插

DWG. NO.: 912564-XXX-L

REV AX

SVL\P\M12